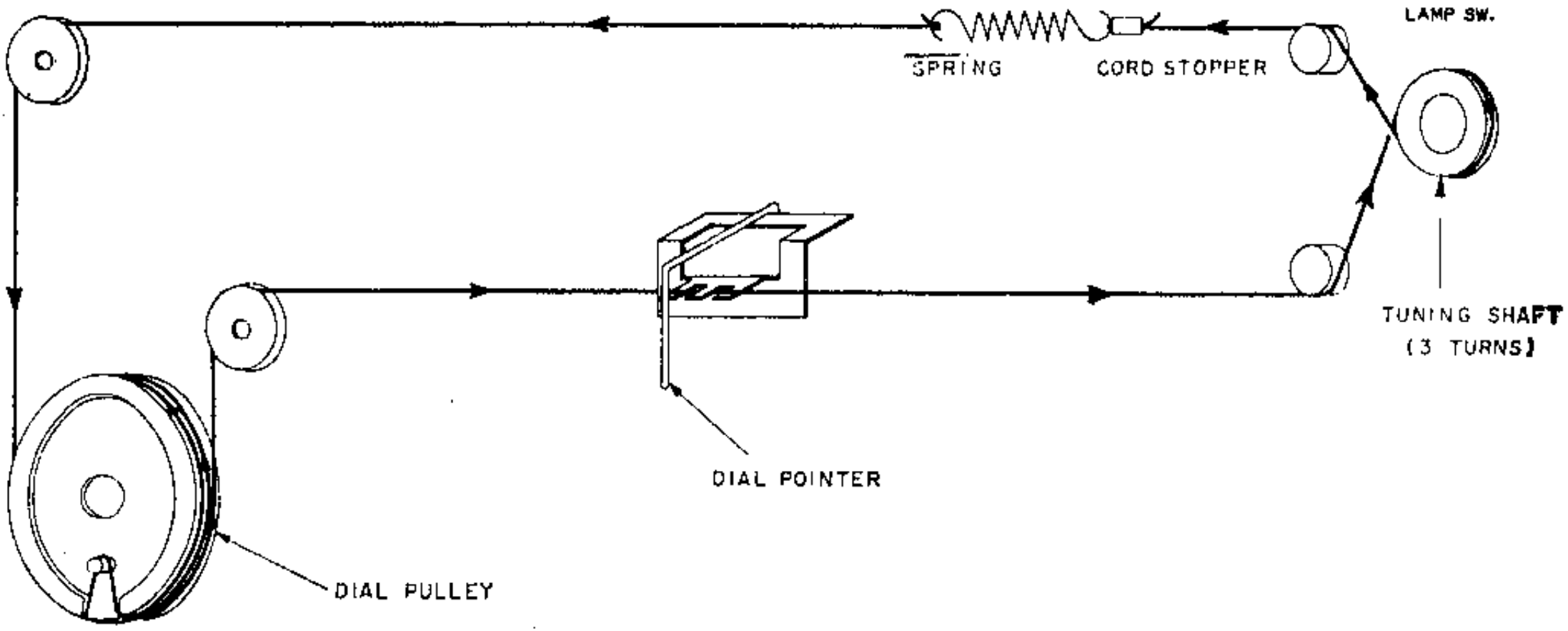
LAMP SW.
SPRING
CORD STOPPER
TUNING SHAFT
(3 TURNS)
DIAL POINTER
DIAL PULLEY

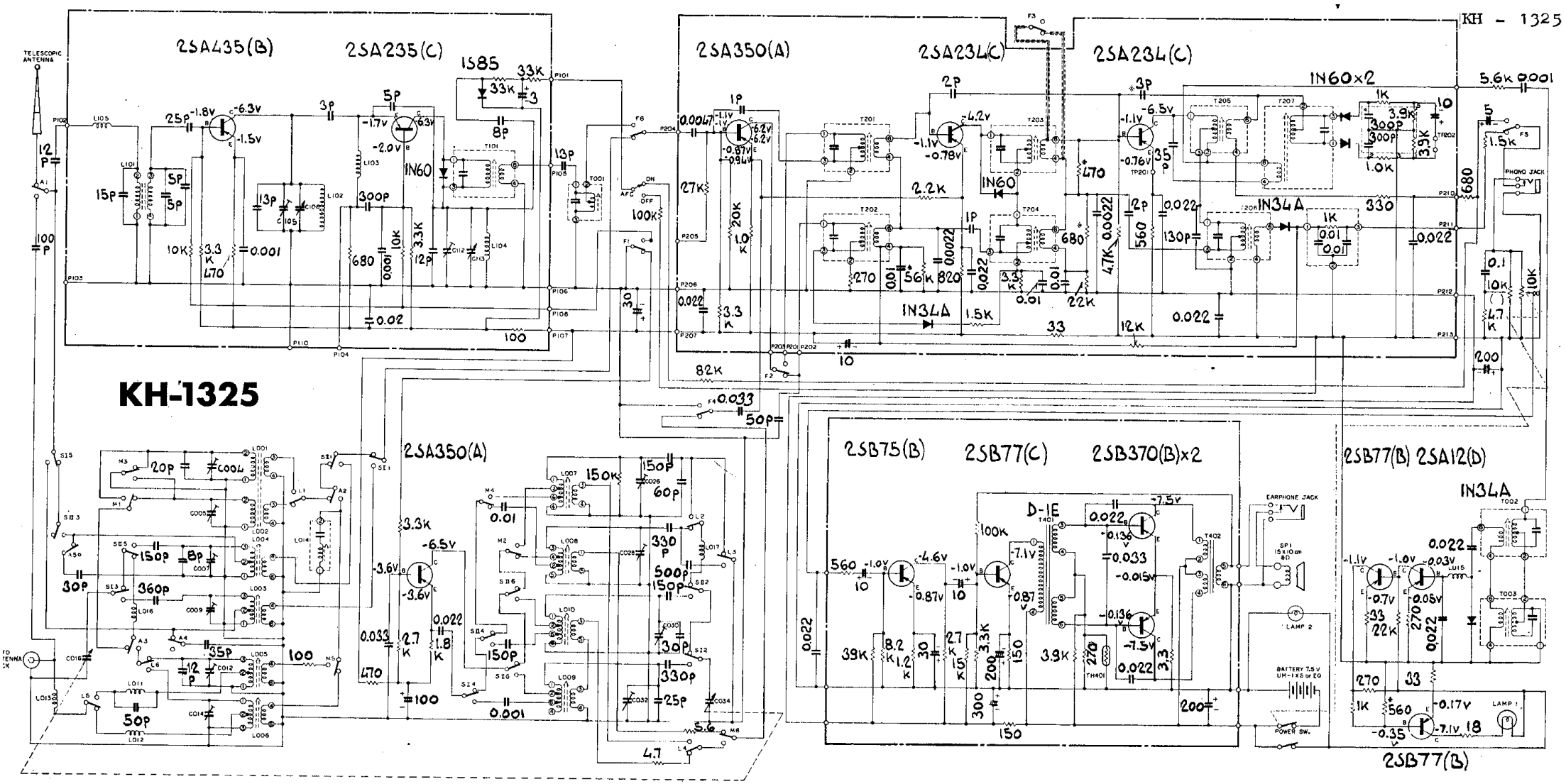

Note: 1) C_{218} and C_{219} are changed to 1000pF.
2) R_{210} is changed to 680Ω.
3) R_{211} is changed to 330Ω.